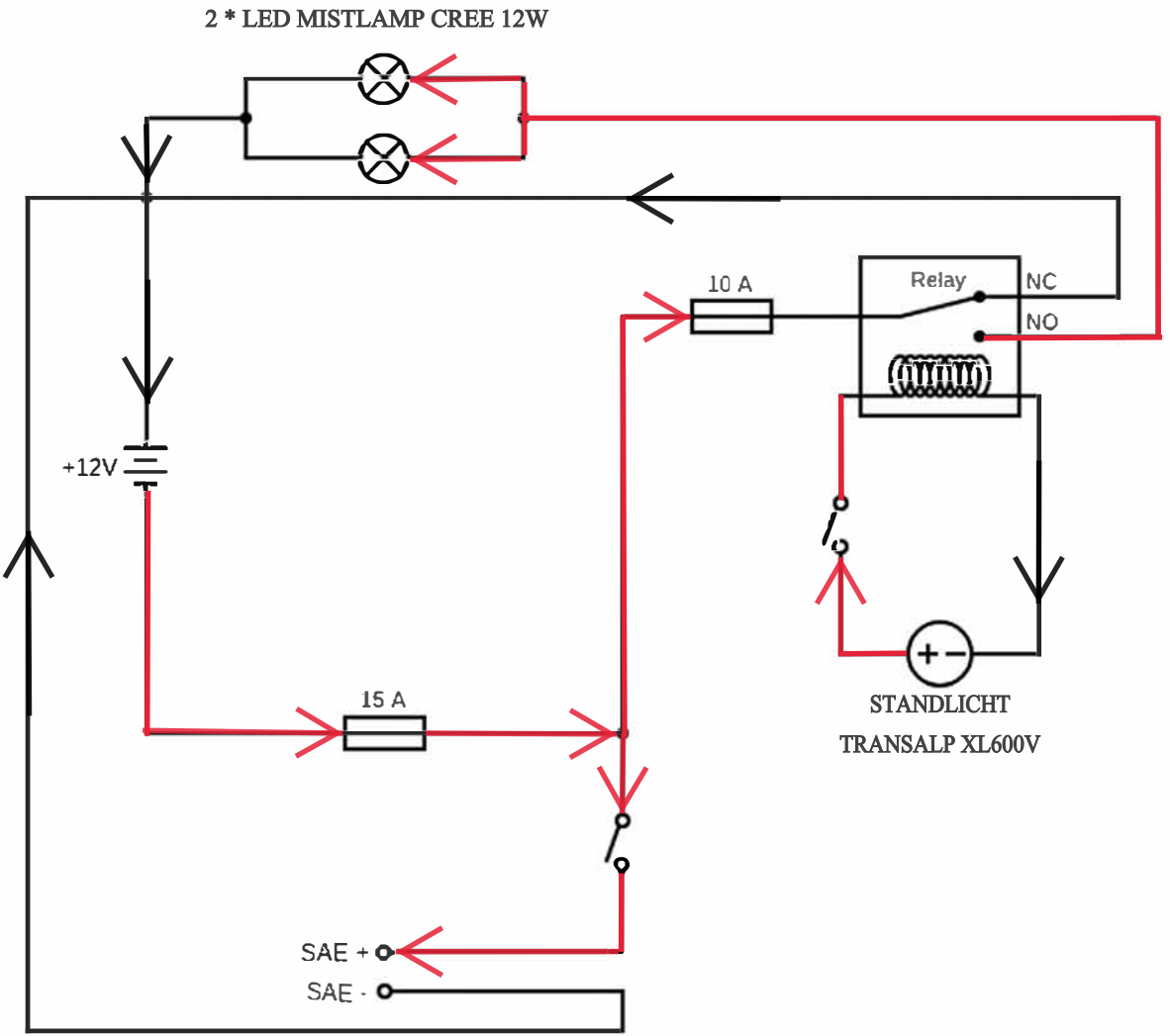
2 * LED MISTLAMP CREE 12W
10 A
Relay
NC
NO
+12V
15 A
STANDLICHT
TRANSALP XL600V
SAE +
SAE -